LEFROY BROOKS
IBROC HOUSE ESSEX ROAD
HODDESDON HERTS EN11 OQS UK
T: +44 (0)1992 708 316 F: +44 (0)1992 708 317

RL-1481

BELLE AIRE LEVER BIDET THREE HOLE
WITH SLOW RUNNING WASTE

DIMENSIONAL DATA SHEET

DATE: 2 August 2010

ISSUE: 028 B

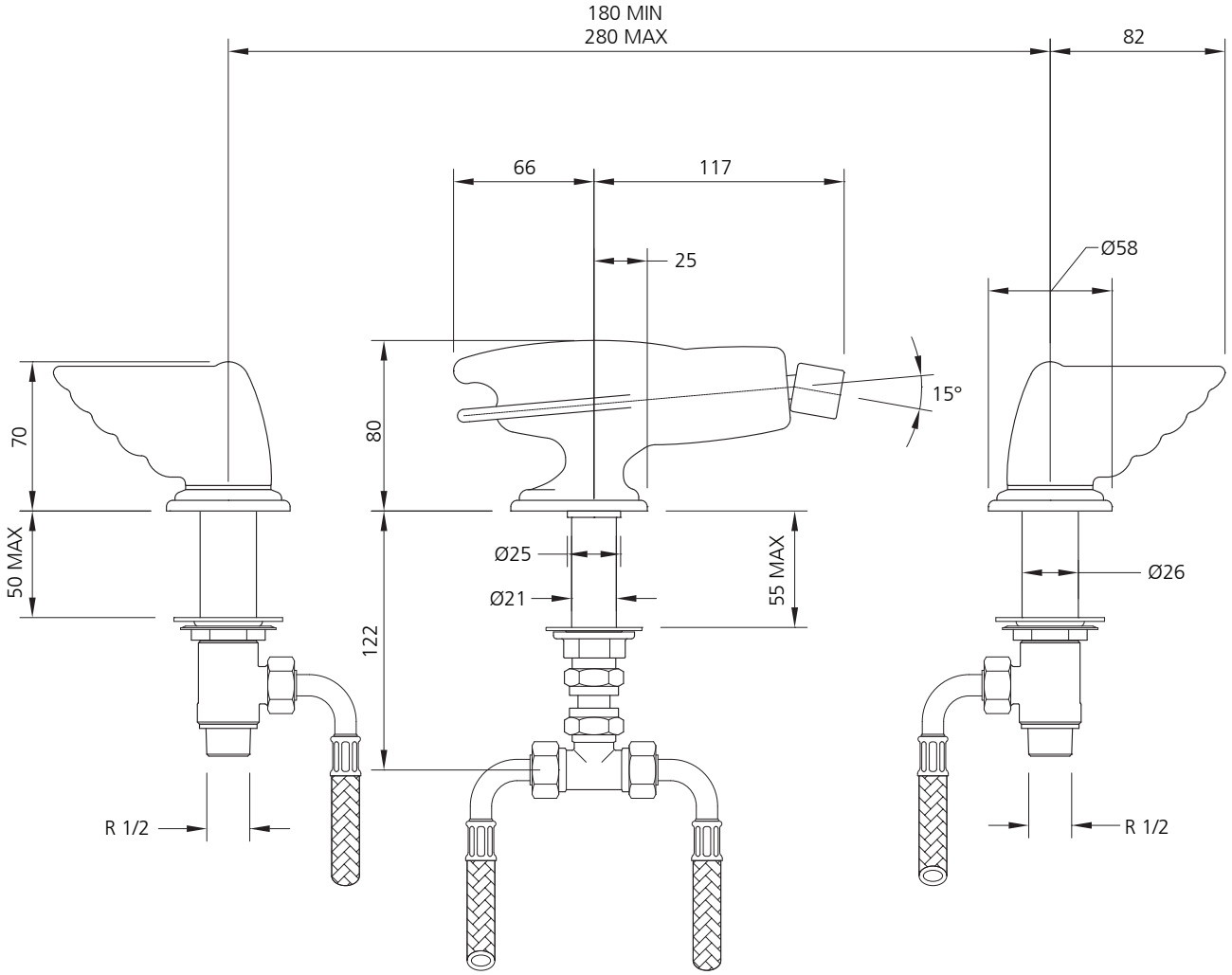

DIMENSIONS IN MILLIMETRES

©COPYRIGHT 2010. CHRISTO LEFROY BROOKS. ALL RIGHTS RESERVED.

WHILST EVERY EFFORT IS MADE TO ENSURE THE ACCURACY OF THESE DATA SHEETS THEY ARE SUBJECT TO CHANGE WITHOUT NOTICE AS PART OF THE COMPANY'S PRODUCT DEVELOPMENT PROCESS